VOLA T60, T65, T68

Fitting instruction
Montageanleitung
Monteringsvejledning
Monteringsvägledning
Montage hanleiding
Manuel de montage

T60: 1

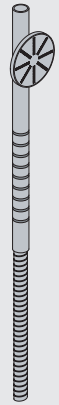

T68: 1 + 2

T65: 3 - 7

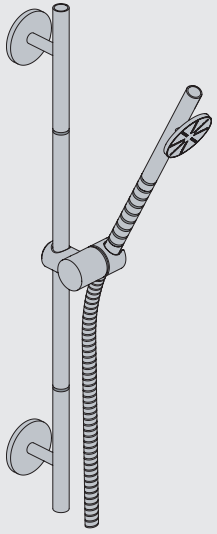

www.vola.com

T60-T65-T68_V3_40998980
23-08-2023

5 703182 430775

1

T60

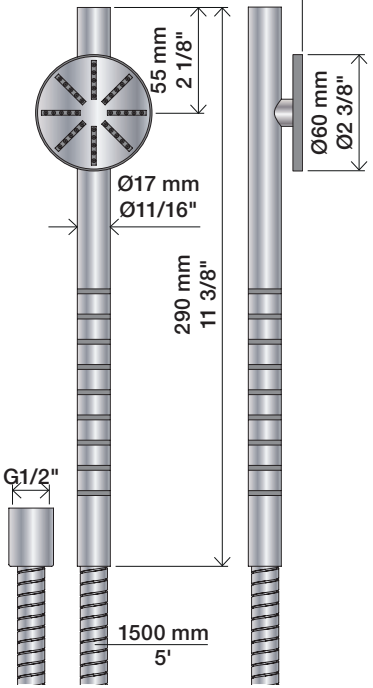

Data	Bar:	1	2	3	4	5
T60	(l/min)	6.9	9.8	12	14	15
	(Gal/min)	1.8	2.6	3.2	3.7	4.1
	Max. 65°C. 150°F					

USA:
Max. flow rate:
1.6 Gal/min
6.0 l/min.

Service - VR556

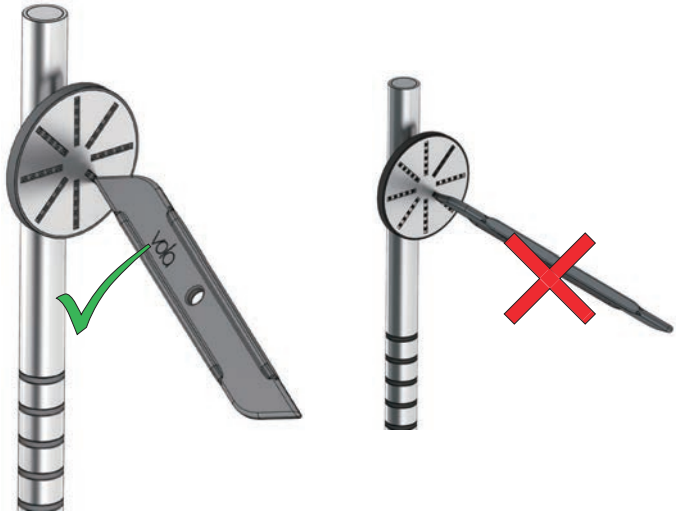

Bathtub
Badewanne

Badekar
Badkar

Badkuip
Baignoire

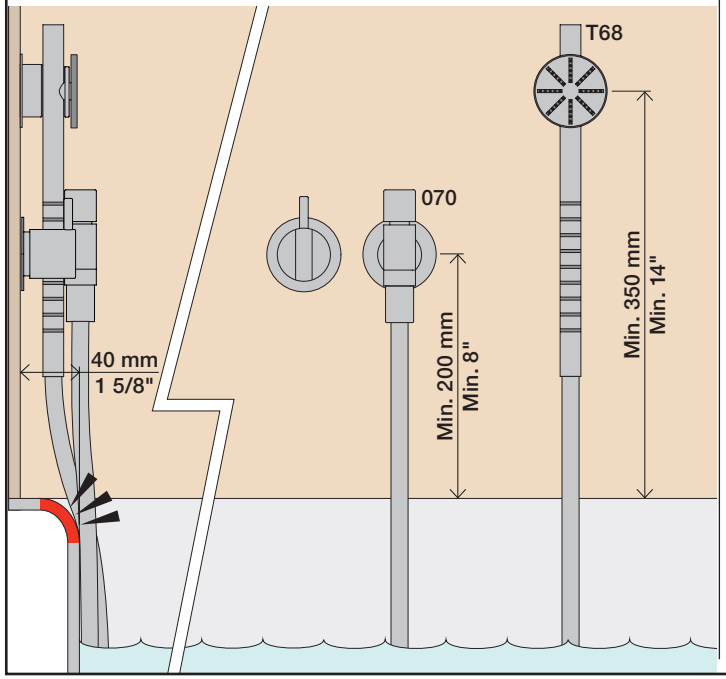

2

T68

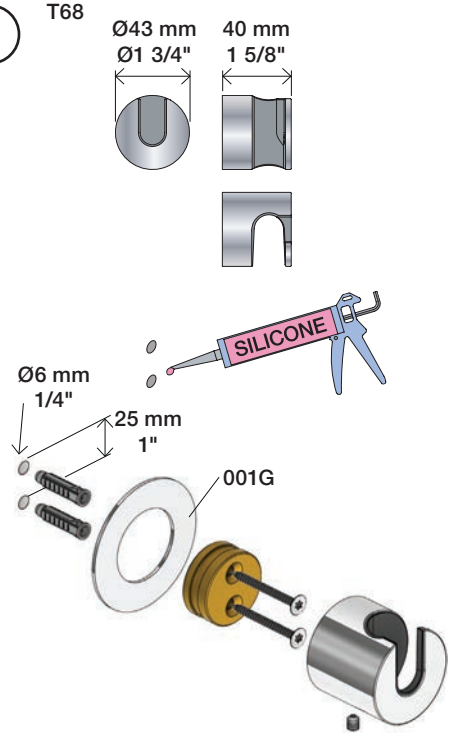

T8 ⇨ T68

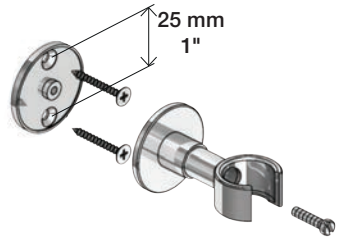

3

T65

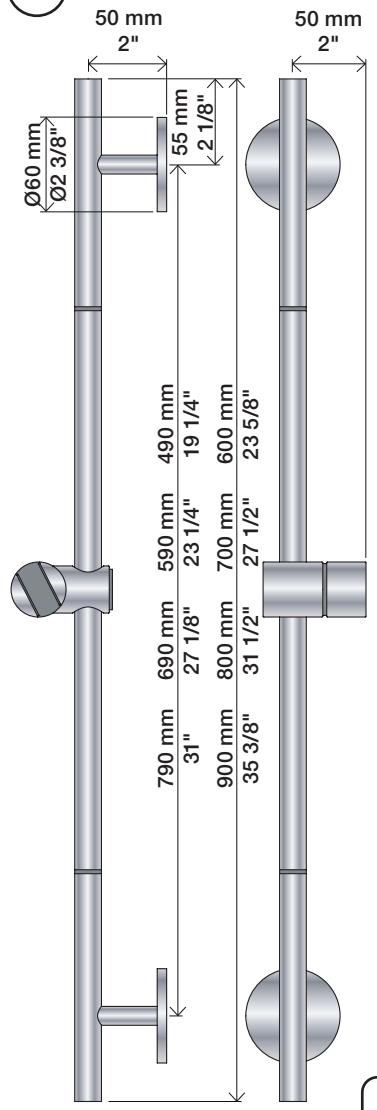

4

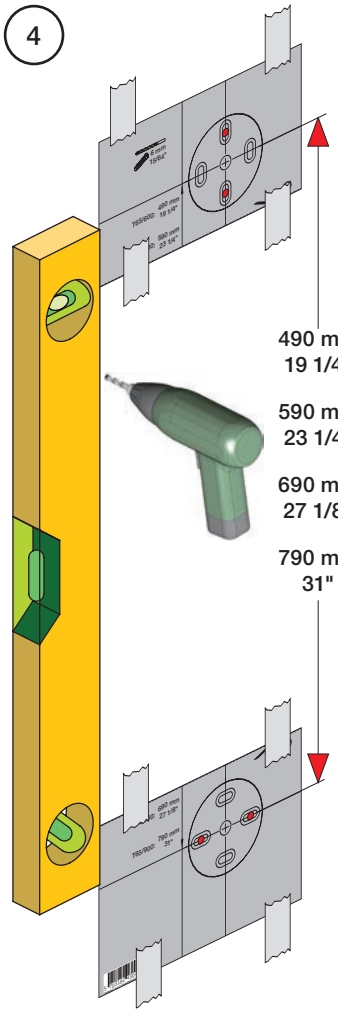

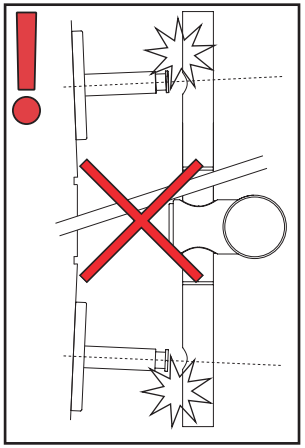

5

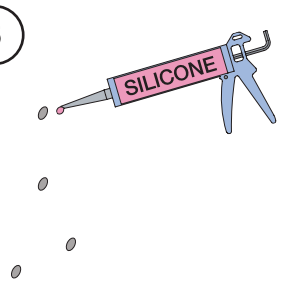

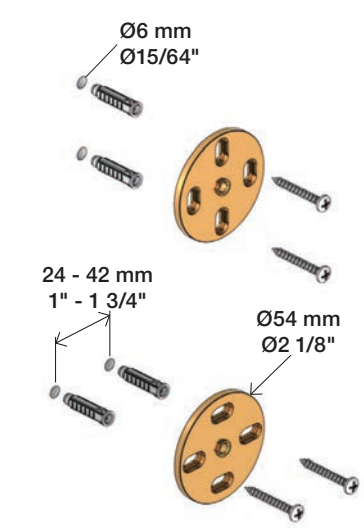

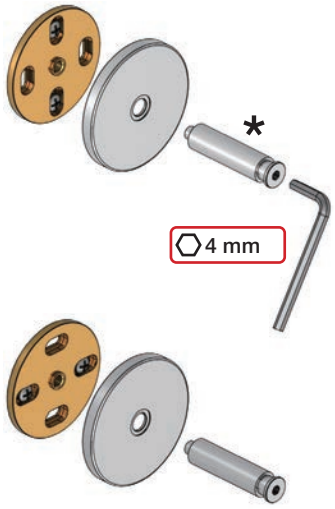

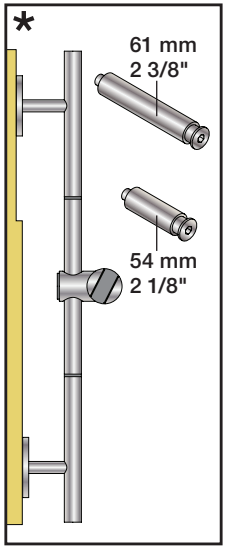

6

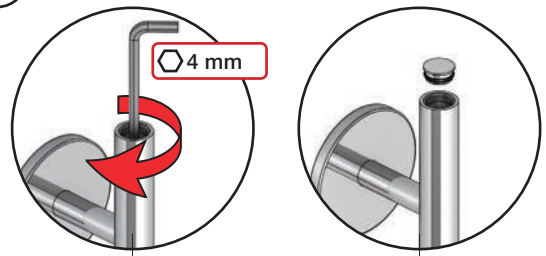

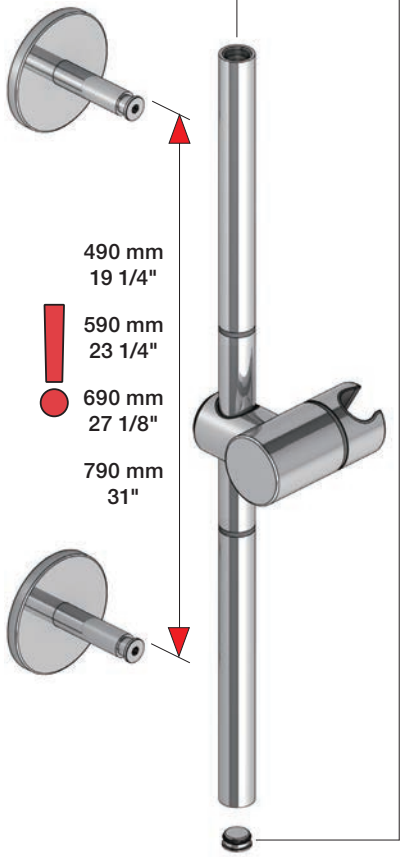

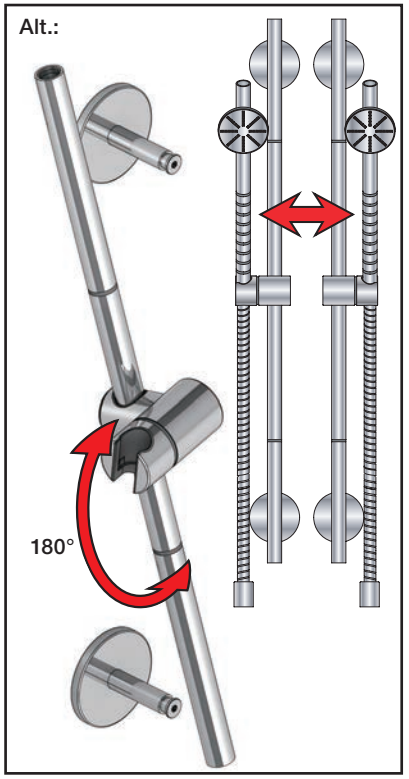

7

8

VOLA A/S • Lunavej 2 • DK-8700 Horsens • Tel. +45 7023 5500 • Fax +45 7023 5511 • sales@vola.dk • www.vola.com

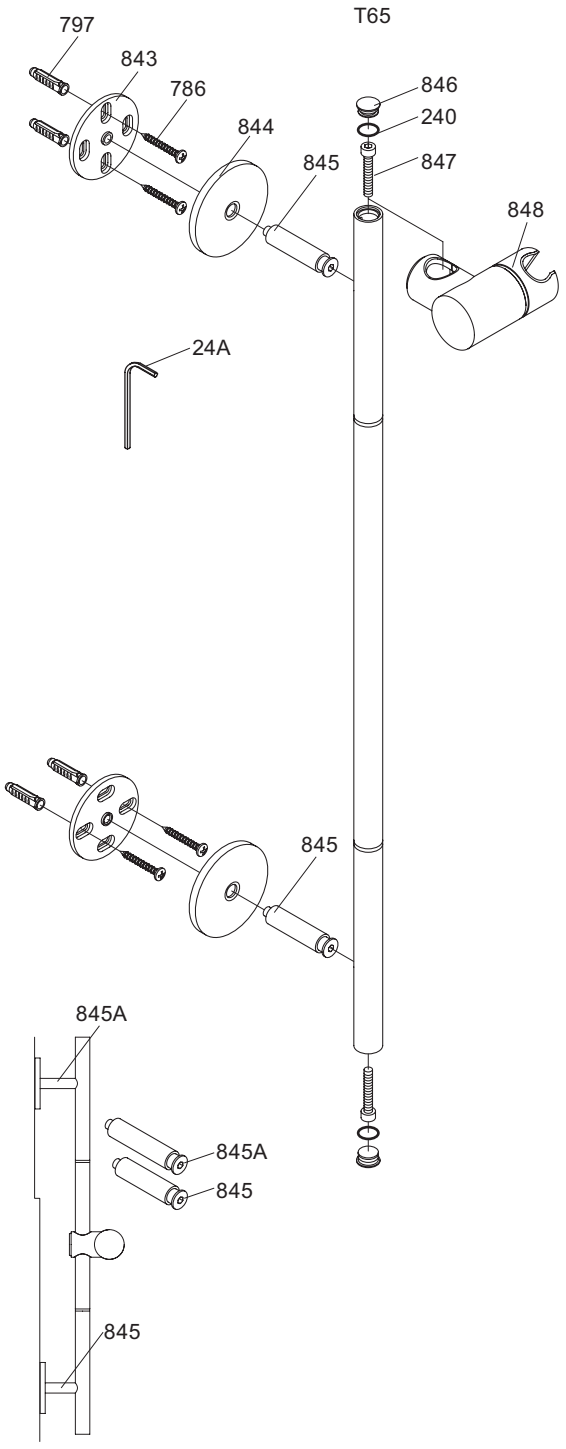

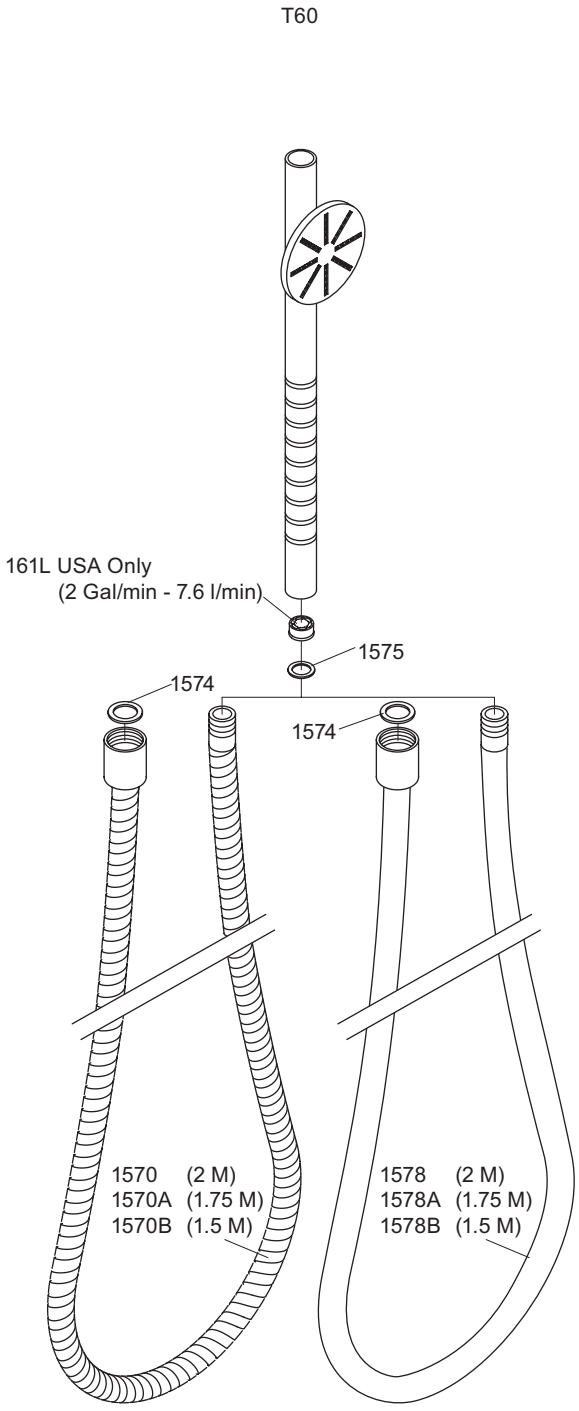

vola
Lunavej 2
DK-8700 Horsens
Tlf : + 45 7023 5500
sales@vola.com
www.vola.com

VOLA T65

T65-T60

Date
Mar. 15

Rev.
0

Sheet
SB 42.65