VOLA T12, T12-BP,
VOLA T13, T13-BP,
VOLA T13L, T13L-BP,
VOLA T15, T15-BP

Maintenance
Pflegehinweise
Vedligeholdelse

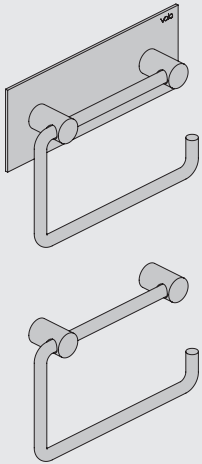

www.vola.com

vola

mnt_T12_V2_40999560

16-08-2021 5 703182 372747

T12

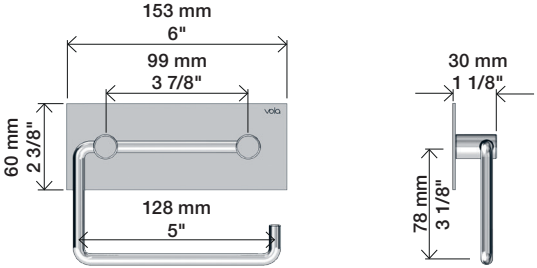

T12-BP

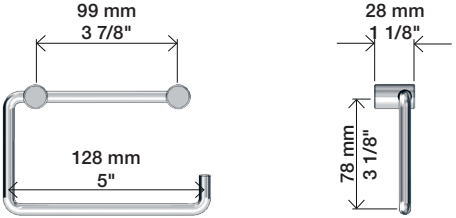

T13

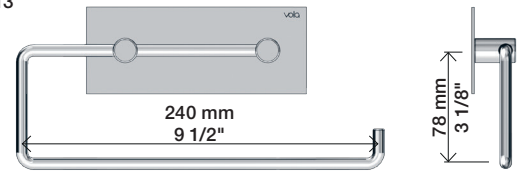

T13-BP

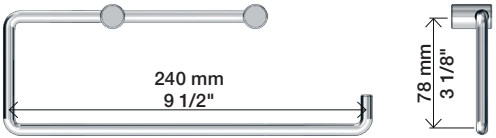

T13L

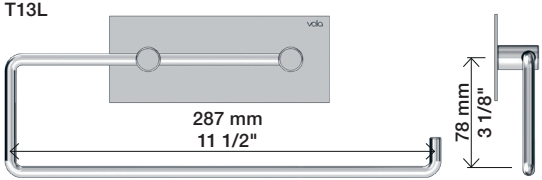

T13L-BP

T15

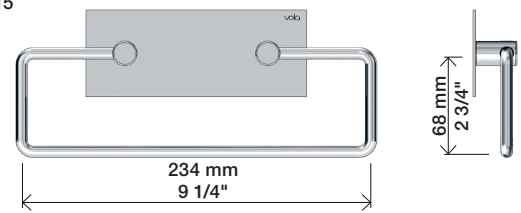

T15-BP

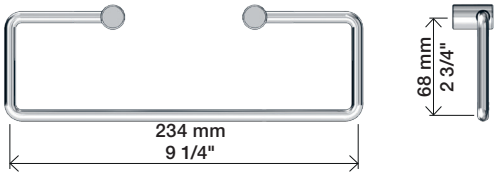

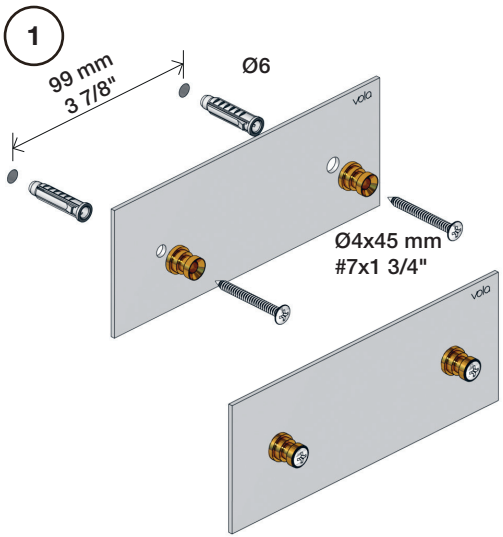
1
99 mm
3 7/8"
Ø6
Ø4x45 mm
#7x1 3/4"
volo

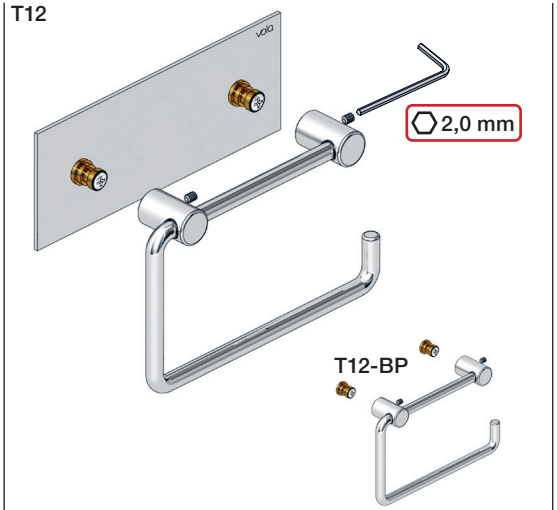
T12
volo
2,0 mm
T12-BP

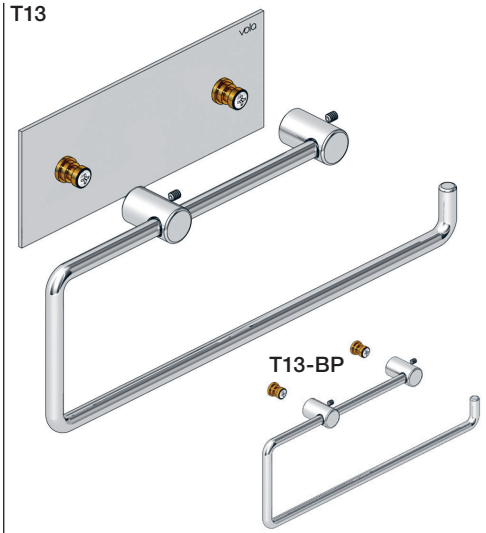
T13
volo
T13-BP

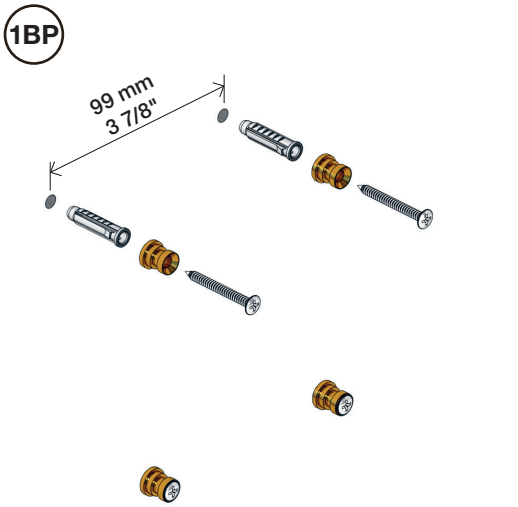
1BP
99 mm
3 7/8"

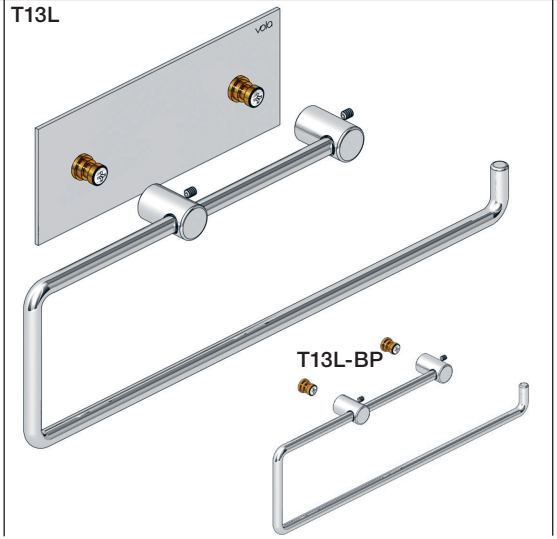
T13L
volo
T13L-BP

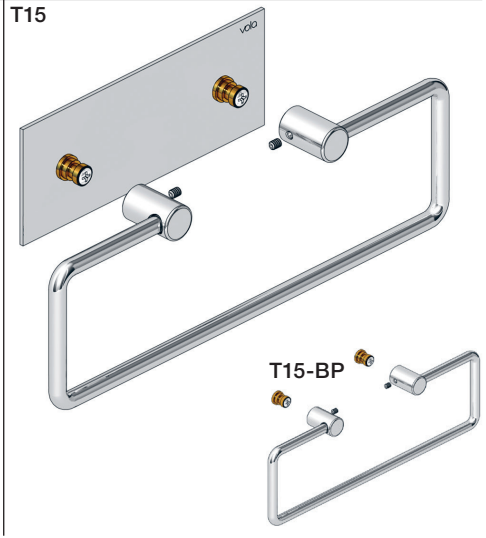
T15
volo
T15-BP

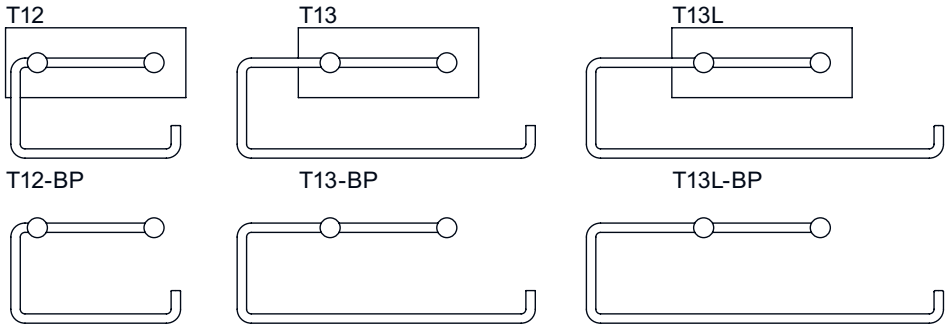

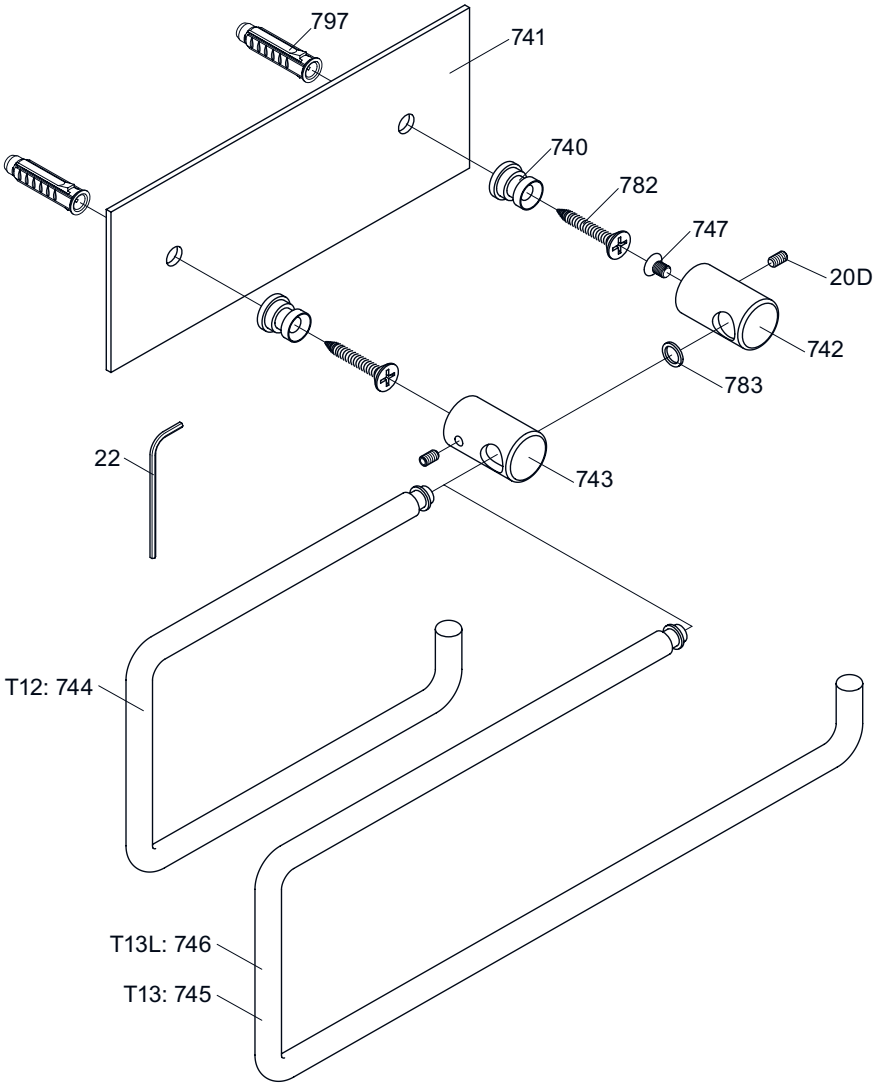

vola
Lunavej 2
DK-8700 Horsens
Tlf : + 45 7023 5500
Fax: + 45 7023 5511
sales@vola.com
www.vola.com

VOLA T12, T13

Date
Feb. 06

Rev.
2

Sheet
SB 42.2