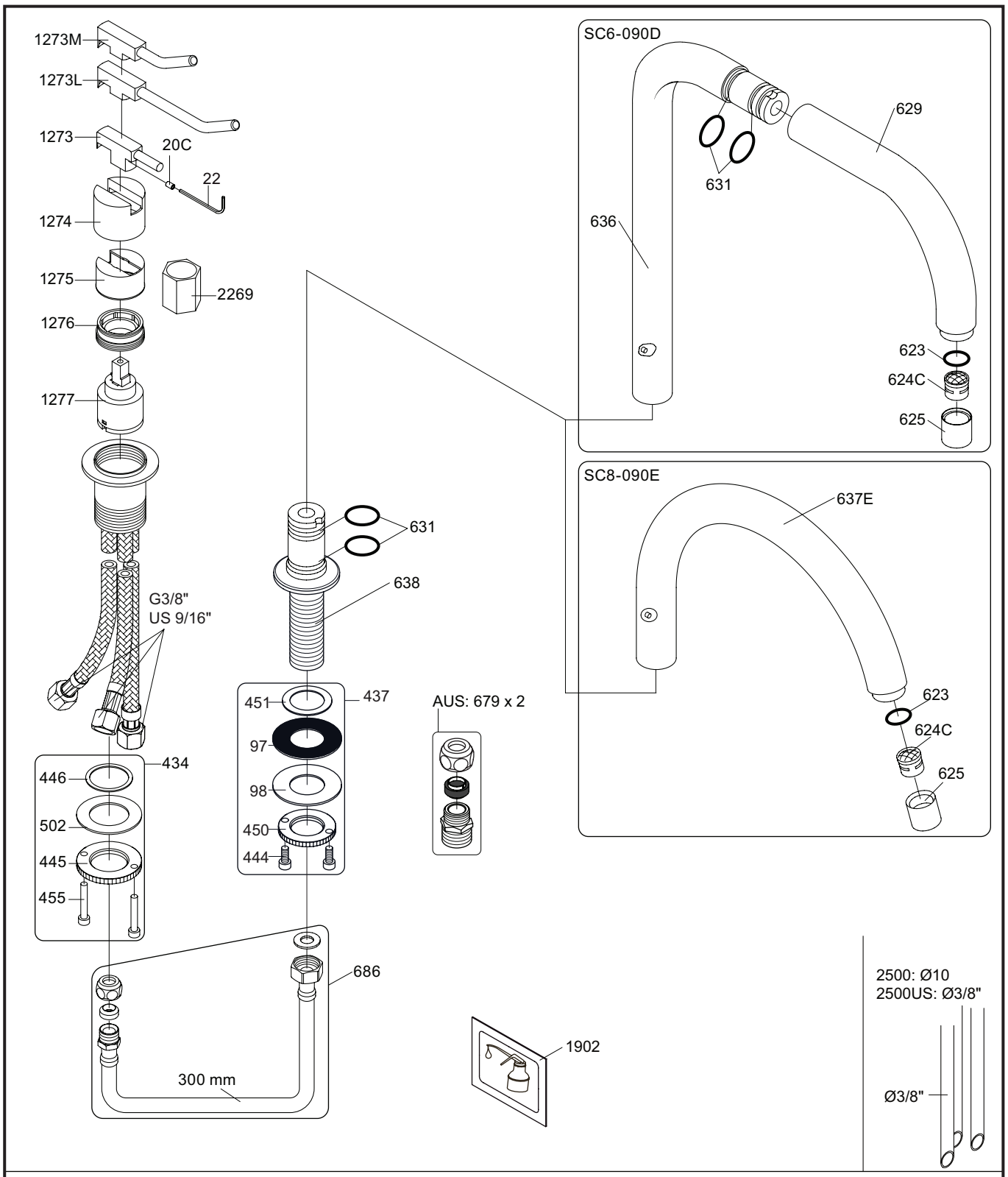

NR11:	VR20, VR22, VR1273, VR1274, VR1275
VR090D/C:	VR623, VR624C, 4xVR631, VR1902
VR1277K:	VR22, VR2269, VR1277
VR434:	VR261, VR263, VR440, VR442, 2xVR455
VR437:	VR97, VR98, 2xVR444, VR450, VR451

vola
Lunavej 2
DK-8700 Horsens
Tlf : + 45 7023 5500
sales@vola.com
www.vola.com

VOLA SC5, SC7

Date
Jan. 23

Rev.
2

Sheet
SB 27.64