VOLA 090, 090A, 090B:
VOLA 090C, 090D, 090E:
VOLA 090G, 090H, 090I, 090V:

1 - 4

VOLA 090FM:

5

Fitting instruction
Montageanleitung
Monteringsvejledning

Monteringsvägledning
Montage hanleiding
Manuel de montage

GODKENDT
TIL DRIKKEVAND

04/00045
04/00109

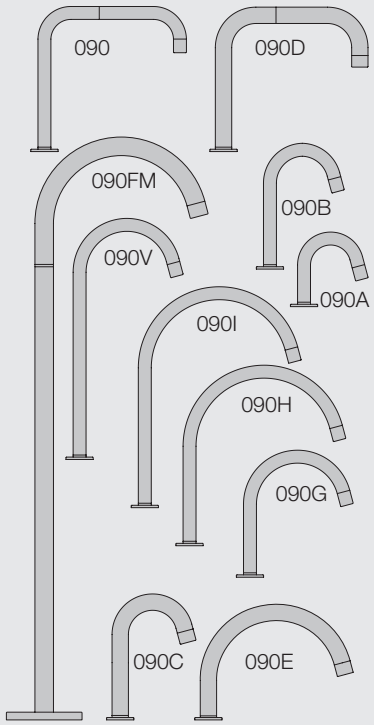


www.vola.com

vola

mnt_090_V4_40999824
21-11-2023

5 703182 372365

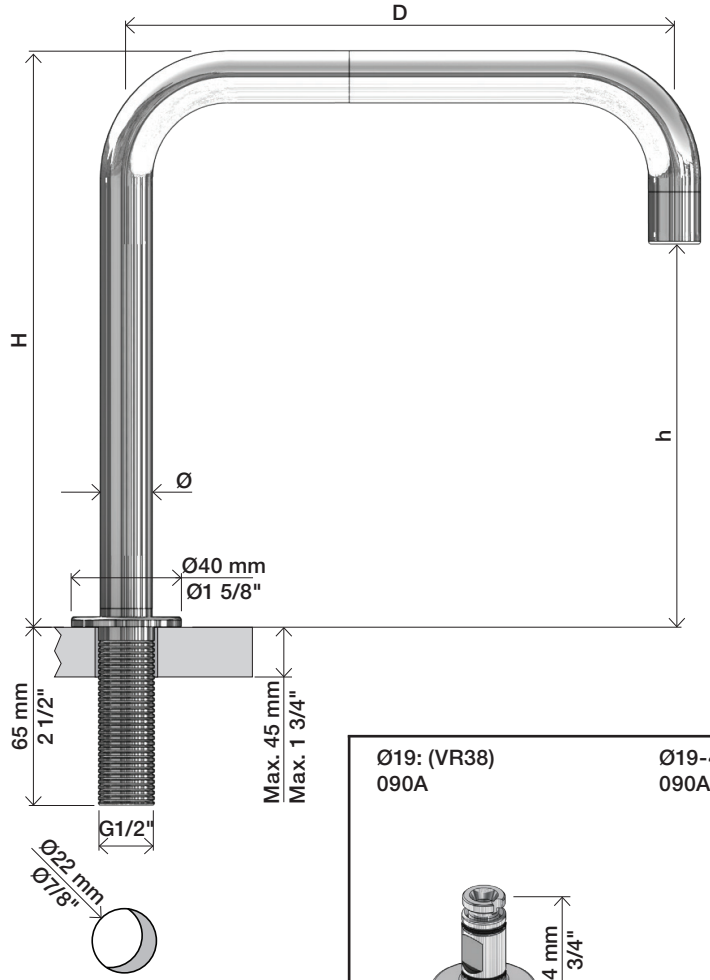


| mm: | Ø | H | D | h |
|---|---|---|---|---|
| 090 | 19 | 210 | 200 | 145 |
| 090A | 19 | 110 | 85 | 40 |
| 090B | 19 | 185 | 100 | 114 |
| 090C | 24 | 185 | 100 | 114 |
| 090D | 24 | 220 | 200 | 130 |
| 090E | 24 | 170 | 200 | 65 |
| 090G | 19 | 185 | 140 | 105 |
| 090H | 19 | 265 | 220 | 155 |
| 090I | 19 | 325 | 220 | 215 |
| 090V | 19 | 355 | 145 | 270 |

| Inches: | Ø | H | D | h |
|---|---|---|---|---|
| 090 | 3/4" | 8 1/4" | 8" | 5 3/4" |
| 090A | 3/4" | 4 1/4" | 3 1/2" | 1 1/2" |
| 090B | 3/4" | 7" | 4" | 4 1/2" |
| 090C | 1" | 7" | 4" | 4 1/2" |
| 090D | 1" | 8 3/4" | 8" | 5" |
| 090E | 1" | 6 3/4" | 8" | 2 1/2" |
| 090G | 3/4" | 7" | 5 1/2" | 4" |
| 090H | 3/4" | 10 1/2" | 8 5/8" | 6" |
| 090I | 3/4" | 12 3/4" | 8 5/8" | 8 1/2" |
| 090V | 3/4" | 14" | 5 3/4" | 10 1/2" |

Ø19: (VR38)
090A

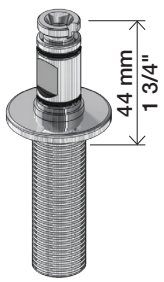


Ø19-40: (VR38A)
090A

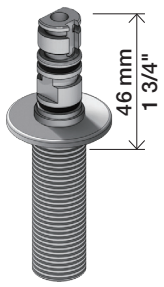


Ø19: (VR38L)
090
090B
090G
090H
090I
090V

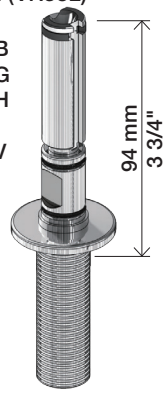


Ø19-40: (VR38)
090
090B
090G
090H
090I
090V

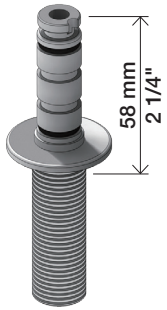


Ø24: (VR638)
090C
090D
090E

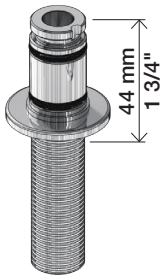


Ø24-40: (VR633)
090C
090D
090E

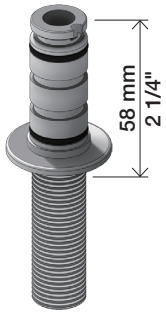


1

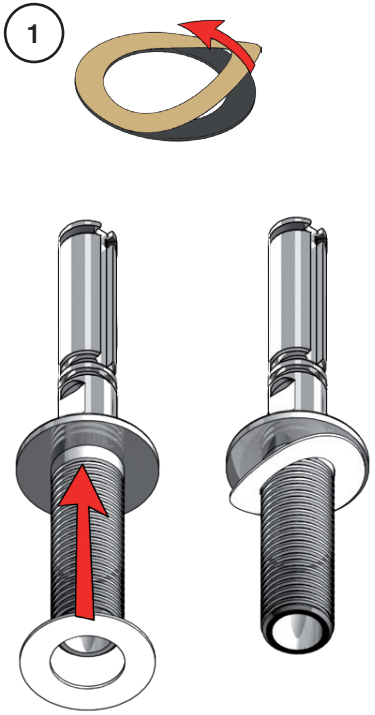

2

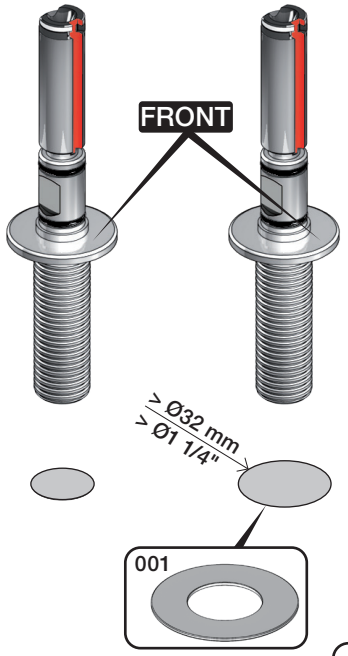

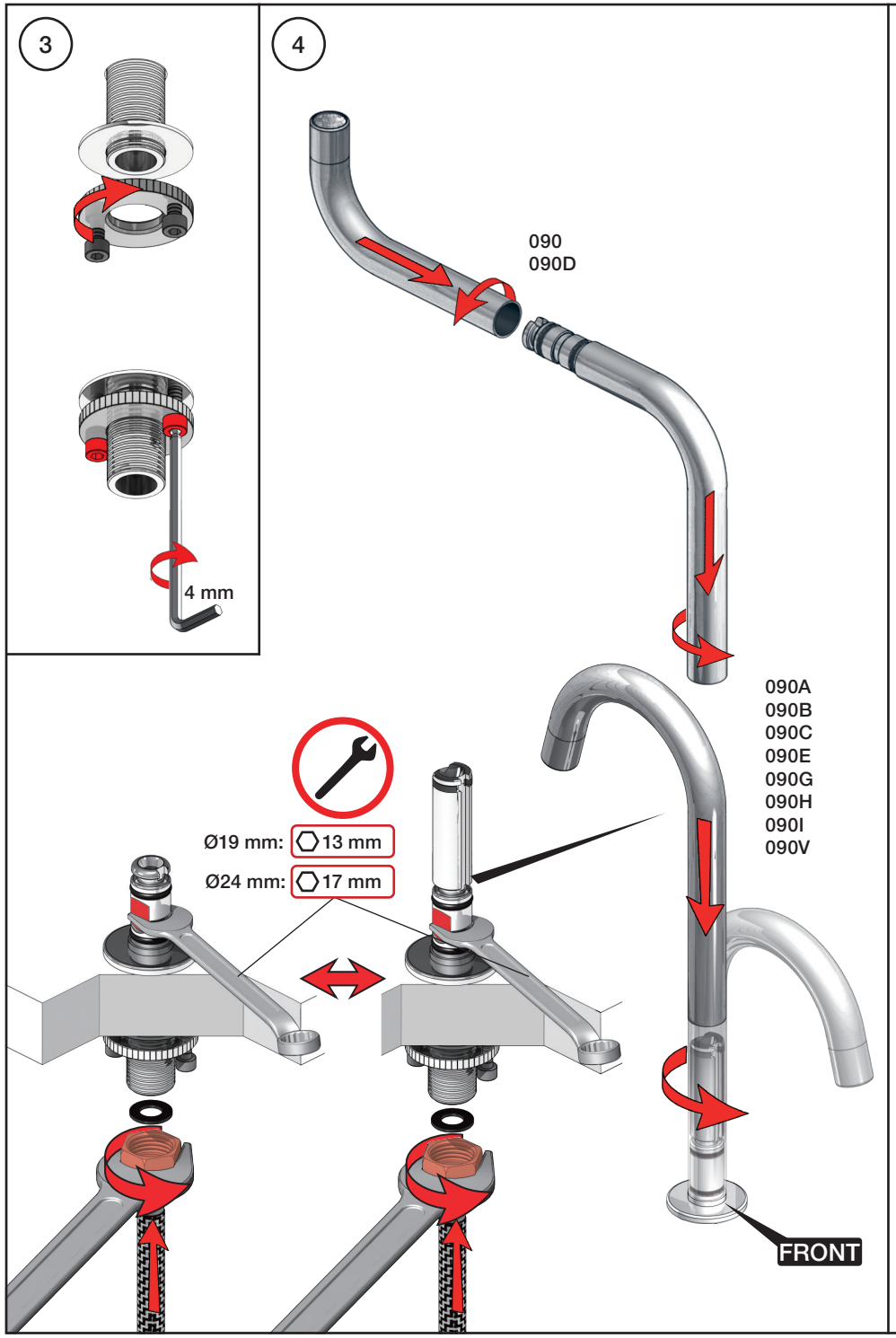


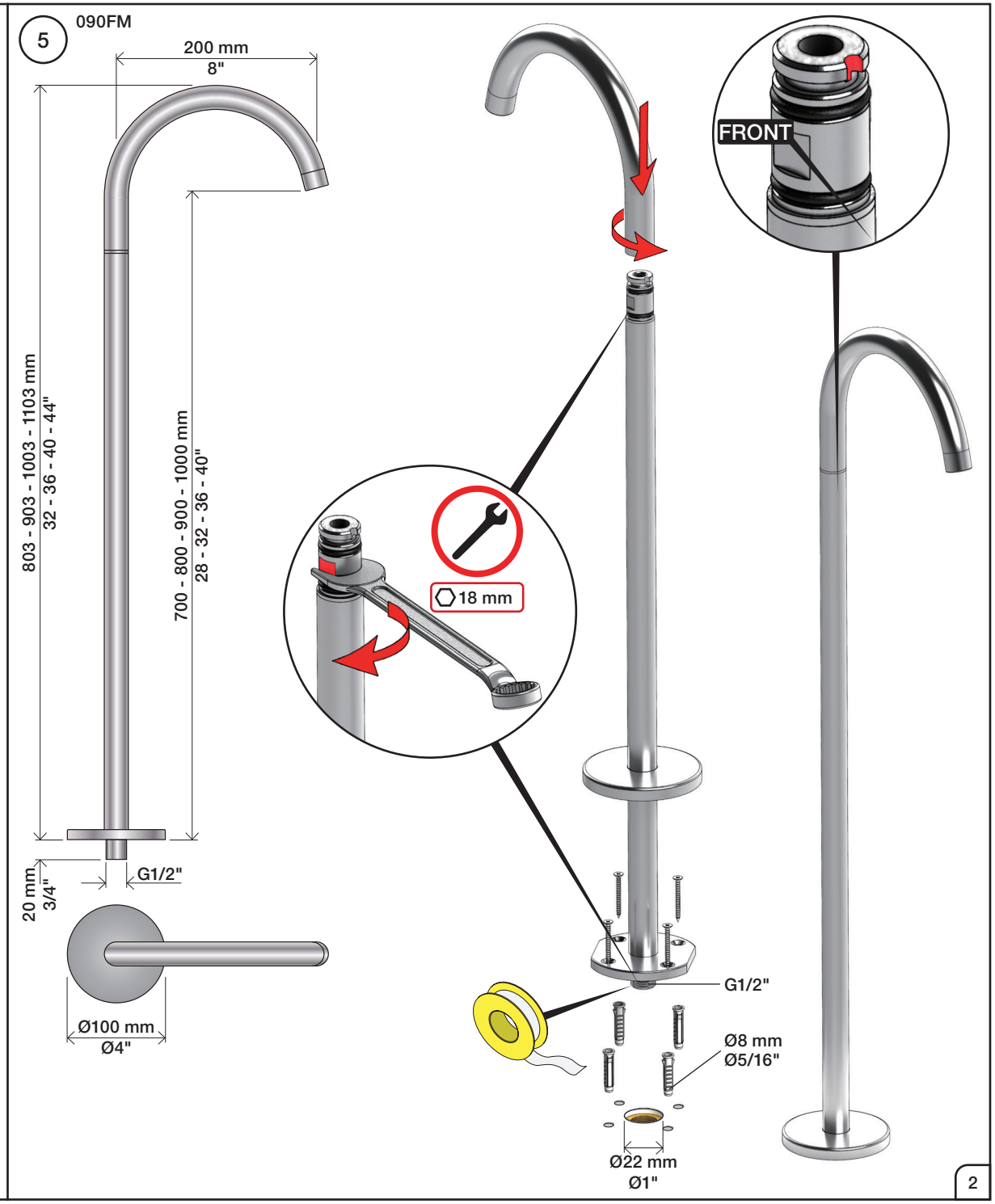




VOLA A/S • Lunavej 2 • DK-8700 Horsens • Tel. +45 7023 5500 • sales@vola.dk • www.vola.com

634E-40* - Oct. 2014:
Not backward compatible.
Nicht abwärtskompatibel.
Ikke bagudkompatibel.
Inte bakåtkompatibel.
Niet achterwaarts compatibel.
Pas rétrocompatible.

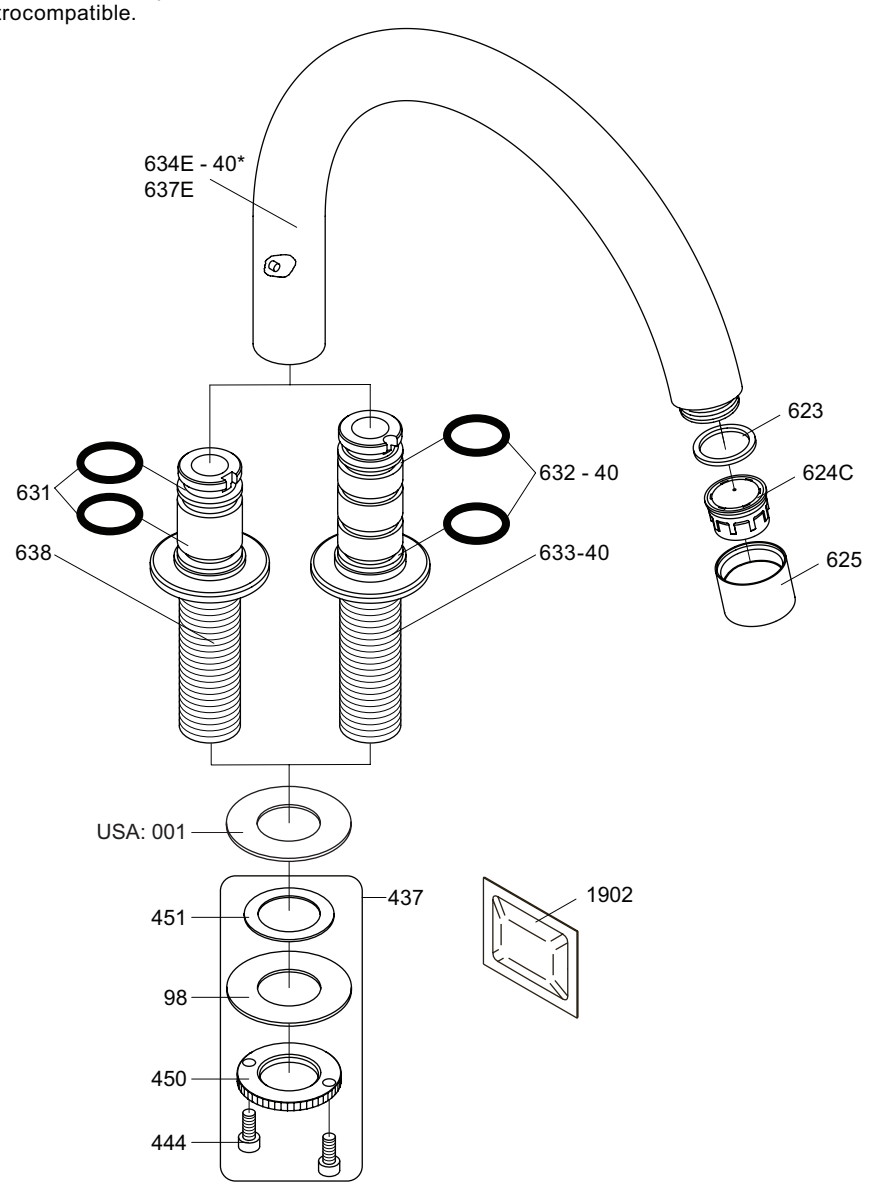


| | |
|---|---|
| VR090D/C: | VR623, VR624C, 4xVR631, VR1902 |
| VR090D/C-40: | VR623, VR624C, 2xVR631, 2xVR632, VR1902 |
| VR437: | VR98, 2xVR444, VR450, VR451 |


vola
Lunavej 2
DK-8700 Horsens
Tlf : + 45 7023 5500
sales@vola.com
www.vola.com


# VOLA 090E

Date
Oct. 2014

Rev.
1

Sheet
SB 18.2