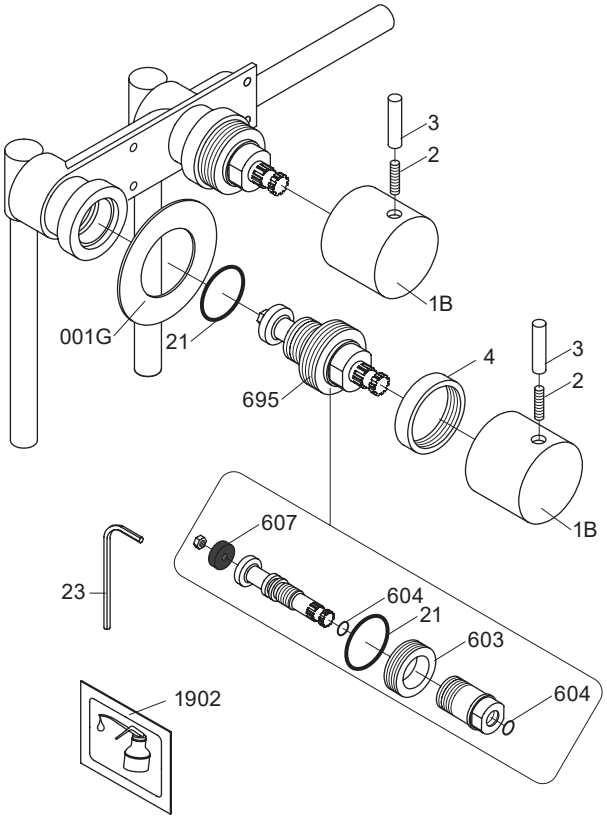

NR3:	VR1B, VR2, VR3, VR4, VR23	727629.3xx
VR600:	2xVR21, VR23, 4xVR604, 2xVR607, VR1902	745132.323
VR695K:	VR21, VR23, VR695	

vola
Lunavej 2
DK-8700 Horsens
Tlf : + 45 7023 5500
Fax: + 45 7023 5511
sales@vola.com
www.vola.com

VOLA V700

Date
Jan. 70

Rev.
0

Sheet
SB 6